Penal-Ware® 1674 Series

Drinking Bubbler Assembly

1674-1-BP-3

Fixture May Show Some Available Options

Please visit ***www.acorneng.com*** for most current specifications.

Drinking Bubbler Assembly

Fixture is arranged to be installed on finished wall and serviced from an accessible pipe chase. Optional Wall Sleeve or Metal Template is recommended on all installations for required wall openings.

Housing is fabricated from 14 gage, type 304 stainless steel. Construction is seamless welded with welds ground smooth. Exterior is polished to a satin finish.

Optional Valve is an Air-Control pneumatically operated, pushbutton valve using atmospheric air. Pushbutton is vandal-resistant and requires less than 5 pounds to activate valve. Valve is direct acting, non-metering type. Valve includes a 0.5 GPM flow control and can be remotely located up to 10 feet from the operating pushbutton. Valve conforms with the lead-free requirements of NSF 61, Section 9-1997.

Regularly Furnished items include an anchor plate and hardware for walls up to 8” thick.

GUIDE SPECIFICATION

Provide and install Acorn Penal-Ware Drinking Bubbler Assembly (specify model number and options). Fixture shall be fabricated from 14 gage, type 304 stainless steel and exposed surfaces shall have a satin finish. Exposed trim shall be chrome-plated. Fixtures shall be furnished with an anchoring plate and necessary fasteners for proper installation. Valve to conform with NSF 61, Section 9-1997 lead-free requirements.

Acorn Engineering Company • 15125 Proctor Avenue • P.O. Box 3527 • City of Industry, CA 91744-0527 U.S.A.
Tel: (800) 488-8999 • (626) 336-4561 • Fax: (626) 961-2200 • www.acorneng.com • E-mail: info@acorneng.com

Penal-Ware® 1674 : Drinking Bubbler Assembly

WALL THICKNESS AND TYPE (Must Specify)
Thickness _____ Type: __ Concrete __ Block __ Steel

MODEL NUMBER AND OPTIONS SELECTION

BASE MODEL NUMBER
❑ 1674 Drinking Bubbler Assembly

FIXTURE MOUNTING AND WASTE (Must Specify)
❑ - 1 Off-Floor

BUBBLER SELECTION (Must Specify)
❑ - BC Bubbler, Code
❑ - BP Bubbler, Penal
❑ - BPH Bubbler, Hemispherical

VALVE SELECTION (Must Specify)
❑ - 03 Air-Control, Single Temperature
❑ - 09 Punched for Valve by Others (Specify Punching)
❑ - EVS1 Electronic Valve System - Single Temp
❑ - MVC1 Time-Trol - Single Temp
❑ - MVC1-BAT Time-Trol - Single Temp with Battery Operation

Product Options
❑ - EG Enviro-Glaze, Specify Color:_____
❑ - FMT Fixture Mounted Trim
❑ - MA Manifold Air Control Valve __2 __ 3 __4
❑ - MT Metal Template (Only 1 Required Per Project)
❑ - PBH Hemispherical Pushbutton
❑ - SW Wall Sleeve
❑ - TF Transformer (for up to 12 solenoids)
❑ - TG 12-Gage Cabinet

Please visit *www.acorneng.com* for most current specifications.

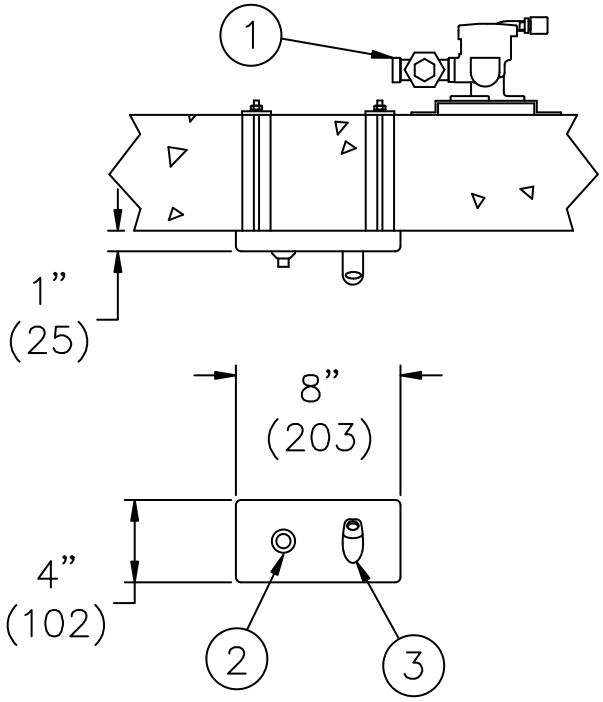

1674–1–BP–03

NOTES:
1. OPTIONAL –03 AIR CONTROL VALVE.
2. PENAL PUSHBUTTON.
3. PENAL BUBBLER.
4. WALL MOUNTING HARDWARE.

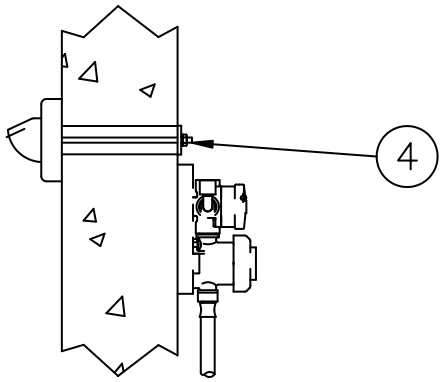

Important: Installation instructions and current rough-in are furnished with each fixture. Do not rough in without certified dimensions.
Dimensions are subject to manufacturer's tolerance of plus or minus 1/4" and change without notice. Acorn assumes no responsibility for use of void or superseded data. © Copyright 2007 Acorn Engineering Company

Selection Summary	Approved for Manufacturing
Model No. & Option_____	Company_____Title_____
Quantity_____	Signature_____ Date_____

Acorn Engineering Company • 15125 Proctor Avenue • P.O. Box 3527 • City of Industry, CA 91744-0527 U.S.A.
Tel: (800) 488-8999 • (626) 336-4561 • Fax: (626) 961-2200 • www.acorneng.com • E-mail: info@acorneng.com