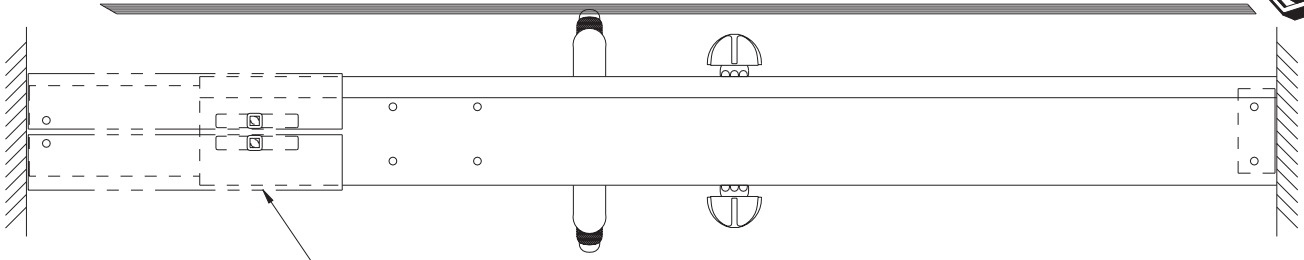

NOTE: INSTALLER MUST PROVIDE CHECKSTOPS WITH SAFTI-THERM VALVES IF OPTIONAL -GX CHECKSTOPS NOT ORDERED FROM ACORN.

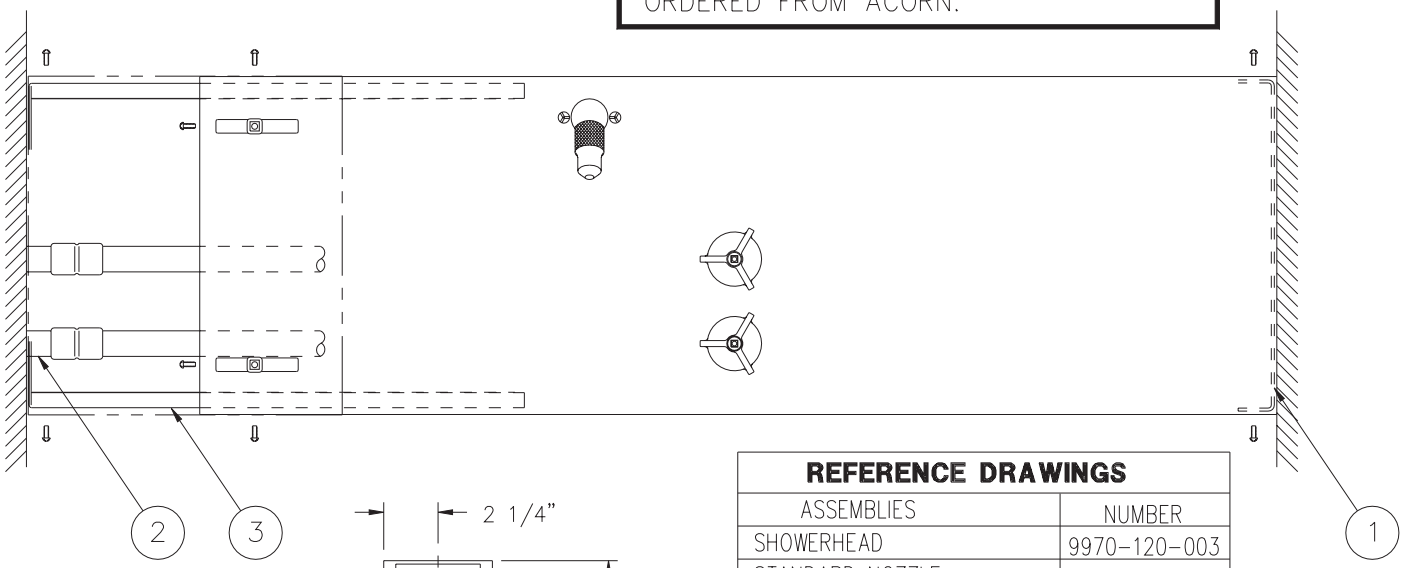

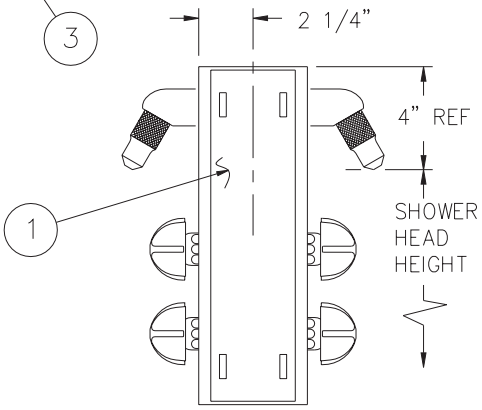

REFERENCE DRAWINGS	
ASSEMBLIES	NUMBER
SHOWERHEAD	9970-120-003
STANDARD NOZZLE	9970-101-004
SAFTI-TROL VALVE	9975-032-001
CARTRIDGES	
FLO-CLOZ	9975-000-001
METER-MATIC	9975-020-003
SAFTI-TROL	9975-030-001
MOUNTING CLIPS	
PANEL SCREW	9951-005-001
TINNERMAN NUT	9951-007-001
AIR-CONTROL VALVE	
VALVE BODY	9975-090-001
METERING SERVOMOTOR	9955-000-002
CHECK STOP/STRAINER	9956-040-003
PUSHBUTTON/ESCUTCHEON	9957-300-001

INSTALLATION INSTRUCTIONS

A- ESTABLISH SHOWER HEAD HEIGHT AT WALL MOUNTING LOCATIONS. REMOVE AND USE FIXED BRACKET (1) AS TEMPLATE. MARK FOR DRILLING AND INSTALLATION OF WALL ANCHORS ON ALL WALLS.

B- INSTALL FIXED BRACKET (1) TO WALL.

C- MEASURE AND CUT SUPPLY TUBING (2) BEFORE HANGING UNIT ON THE WALL.

D- REMOUNT SHOWER TO FIXED BRACKET (1) WHILE AT THE SAME TIME LOCATING AND MOUNTING ADJUSTABLE BRACKET (3) TO THE WALL.

E- SOLDER SUPPLY CONNECTIONS. ALL SUPPLY COUPLINGS AND FITTINGS ARE FURNISHED BY OTHERS.

F- ATTACH ADJUSTABLE COVER(S) (4).

ACORN ENGINEERING COMPANY
P.O. BOX 3527 INDUSTRY, CA. 91744
(626) 336-4561 FAX (626) 961-2200

TITLE		
ACME BACK TO BACK SHOWERS-ADJUSTABLE & FIXED BRACKET 130 SERIES		
MANUFACTURE DATE	DATE ISSUED	DRAWING NUMBER
DECEMBER 1976 TO PRESENT	12/01/89	9900-120-001
	DATE REVISED 10/16/02	

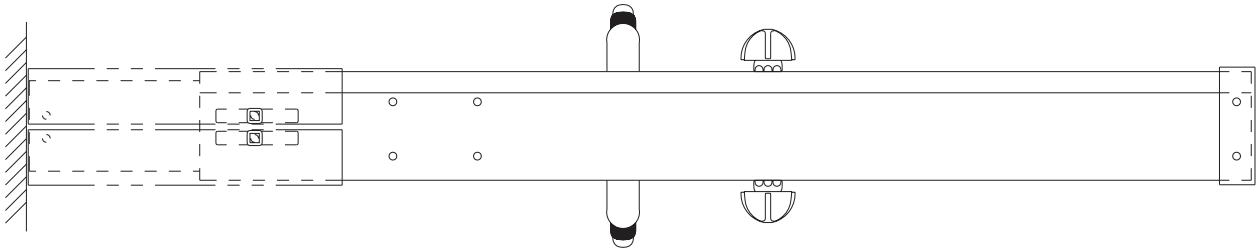

NOTE: INSTALLER MUST PROVIDE CHECKSTOPS WITH SAFTI-THERM VALVES IF OPTIONAL -GX CHECKSTOPS NOT ORDERED FROM ACORN.

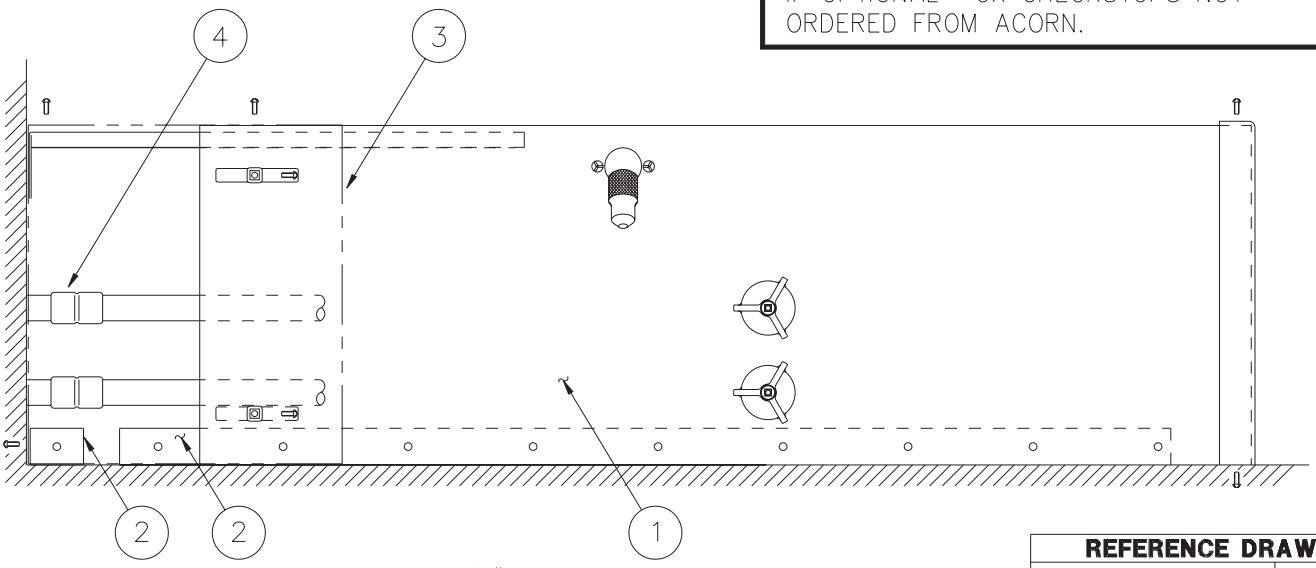

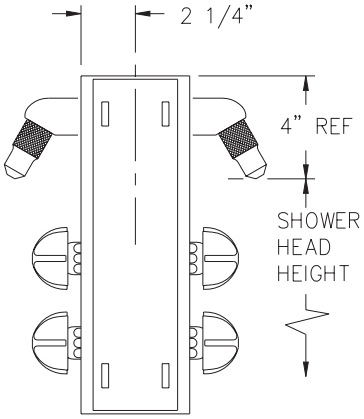

REFERENCE DRAWINGS	
ASSEMBLIES	NUMBER
SHOWERHEAD	9970-120-003
NOZZLE	9970-101-004
SAFTI-TROL VALVE	9975-032-001
MOUNTING HARDWARE	9951-007-001
FASTENERS	9951-005-001
CARTRIDGES	
FLO-CLOZ	9975-000-001
SAFTI-TROL	9975-030-001
METER-MATIC	9975-020-003
AIR-CONTROL	
VALVE BODY	9975-090-001
CHECKSTOP/STRAINER	9956-040-003
METERING SERVOMOTOR	9955-000-002
PUSHBUTTON/ESCUTCHEON	9957-300-001

INSTALLATION INSTRUCTIONS

A- POSITION SHOWER UNIT ① ON WALL WITH HOUSING COMPONENT(S) IN PLACE.

B- MARK THE OUTLINE OF THE UNIT AS IT SETS ON THE WALL.

C- REMOVE UNIT ① FROM WALL. DISASSEMBLE LOWER MOUNTING CHANNEL ② AND COVER ③ FROM HOUSING. POSITION CHANNEL ② ON WALL WITHIN THE OUTLINE.

D- USING CHANNEL ② AS A TEMPLATE, DRILL WALL FOR ANCHORING DEVICES (BY OTHERS). SECURE MOUNTING CHANNEL TO WALL.

E- REASSEMBLE SHOWER UNIT ① TO CHANNEL ②.

F- SOLDER SUPPLY CONNECTIONS ④.

G- REATTACH COVER ③ TO HOUSING. USE FASTENERS AS PROVIDED.

ACORN ENGINEERING COMPANY
P.O. BOX 3527 INDUSTRY, CA. 91744
(626) 336-4561 FAX (626) 961-2200

TITLE		
ACME BACK TO BACK SHOWERS-DWARF WALL INSTALLATION		
MANUFACTURE DATE	DATE ISSUED	DRAWING NUMBER
DECEMBER 1976 TO PRESENT	12/01/89	9900-124-001
	DATE REVISED 10/16/02	

NOTE: INSTALLER MUST PROVIDE CHECKSTOPS WITH SAFTI-THERM VALVES IF OPTIONAL -GX CHECKSTOPS NOT ORDERED FROM ACORN.

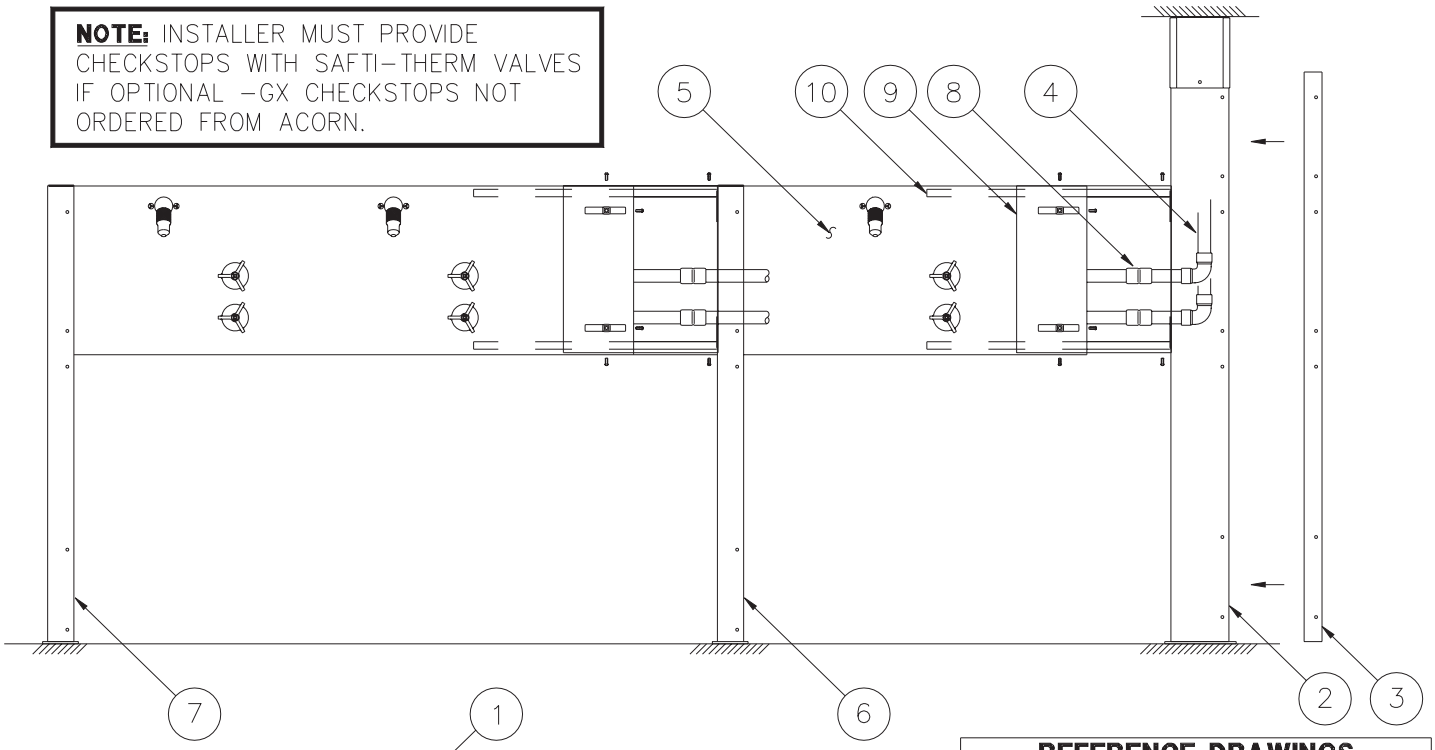

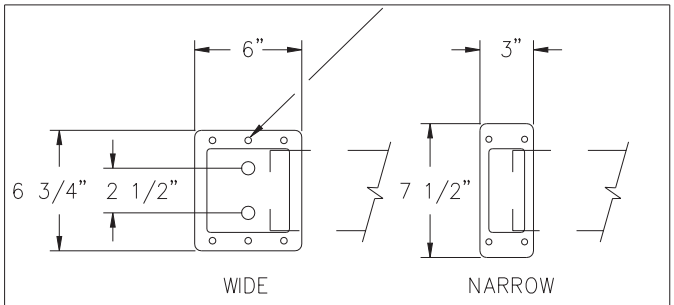

STANCHION FLANGE DIMENSIONS

REFERENCE DRAWINGS	
DWARF WALL INSTALLATION	9900-124-001
ASSEMBLIES	NUMBER
SHOWERHEAD	9970-120-003
NOZZLE	9970-101-004
SAFTI-TROL VALVE	9975-032-001
MOUNTING HARDWARE	9951-007-001
FASTENERS	9951-005-001
CARTRIDGES	
FLO-CLOZ	9975-000-001
SAFTI-TROL	9975-030-001
METER-MATIC	9975-020-003
AIR-CONTROL	
VALVE BODY	9975-090-001
CHECKSTOP/STRAINER	9956-040-003
METERING SERVOMOTOR	9955-000-002
PUSHBUTTON/ESCUTCHEON	9957-300-001

INSTALLATION INSTRUCTIONS

A- LAYOUT FLOOR ANCHOR LOCATIONS (1). MARK FOR DRILLING AND INSTALLATION OF FLOOR ANCHORS. REFERENCE INDIVIDUAL JOB PLAN VIEWS FOR STANCHION LOCATIONS.

B- WHEN SUPPLIES ARE TO BE ENCLOSED WITHIN A STANCHION (2), START INSTALLATION AT THE SUPPLY SIDE. INSTALL (IN THIS CASE) THE FLOOR-TO-CEILING STANCHION (2). REMOVE ACCESS PANEL (3). INSTALL SUPPLIES (4). MEASURE AND CUT SUPPLY INLETS TO SIZE BEFORE INSTALLATION.

C- INSTALL FIRST SHOWER PANEL (5) TO STANCHION (2) BY MEANS OF ADJUSTABLE BRACKET (10). WHILE SUPPORT PANEL (5), INSTALL MIDDLE STANCHION (6). INSERT SHOWER PANEL (5) THRU STANCHION OPENING. ADJUST, DRILL AND TAP SHOWER PANEL (5) TO TO STANCHION (2). FASTEN WITH TRI-SLOT SCREWS AS PROVIDED.

D- INSTALL ADJACENT SHOWER PANEL(S) (7) IN THE SAME FASHION.

E- MAKE SUPPLY CONNECTIONS (8) (CONNECTORS BY OTHERS).

ACORN ENGINEERING COMPANY
P.O. BOX 3527 INDUSTRY, CA. 91744
(626) 336-4561 FAX (626) 961-2200

TITLE		
ACME BACK TO BACK SHOWERS-STANCHION MOUNTED		
MANUFACTURE DATE	DATE ISSUED	DRAWING NUMBER
DECEMBER 1976 TO PRESENT	12/01/89	9900-125-001
	DATE REVISED 10/16/02	