REFERENCE DRAWINGS			
ASSEMBLIES		**PANEL MOUNTING FASTENERS**	
SHOWERHEAD	9970–122–001	TINNERMAN NUT	9951–007–001
STANDARD NOZZLE	9970–101–004	PANEL SCREW	9951–005–001
SAFTI–TROL VALVE	9975–032–001	**AIR-CONTROL VALVE**	
CARTRIDGES		VALVE BODY	9975–090–001
FLO–CLOZ	9975–000–001	METERING SERVOMOTOR	9955–000–002
METER–MATIC	9975–020–003	CHECKSTOP/STRAINER	9956–040–003
SAFTI–TROL (SHOWN)	9975–030–001	PUSHBUTTON/ESCUTCHEON	9957–300–001

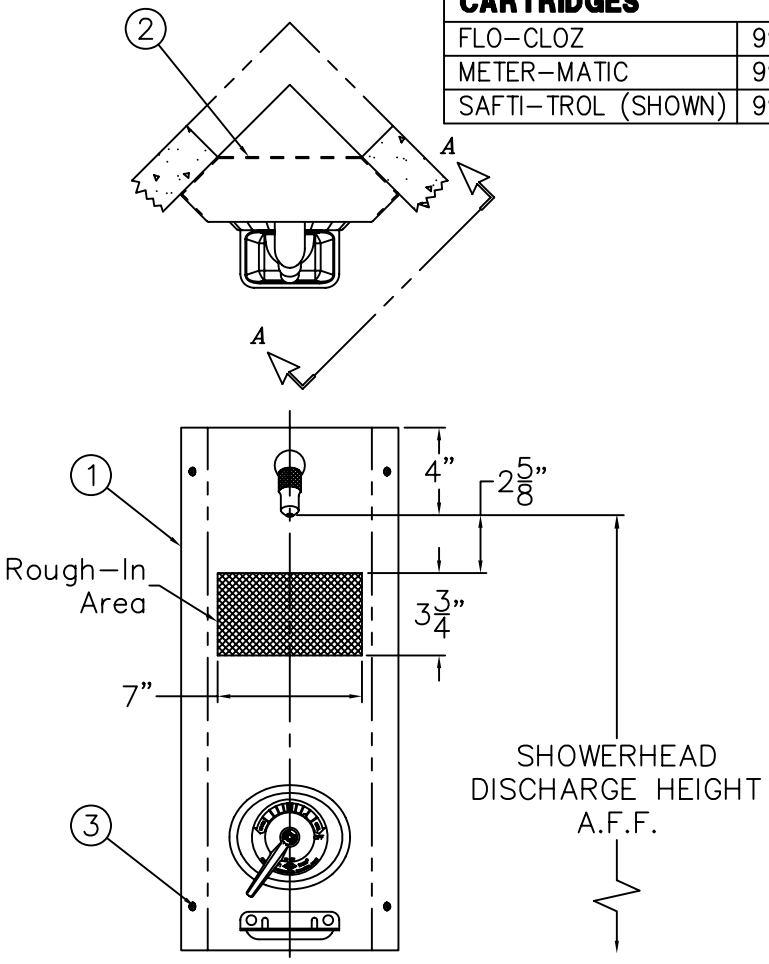

VIEW FROM OTHER SIDE OF FIXTURE IS MIRROR IMAGE

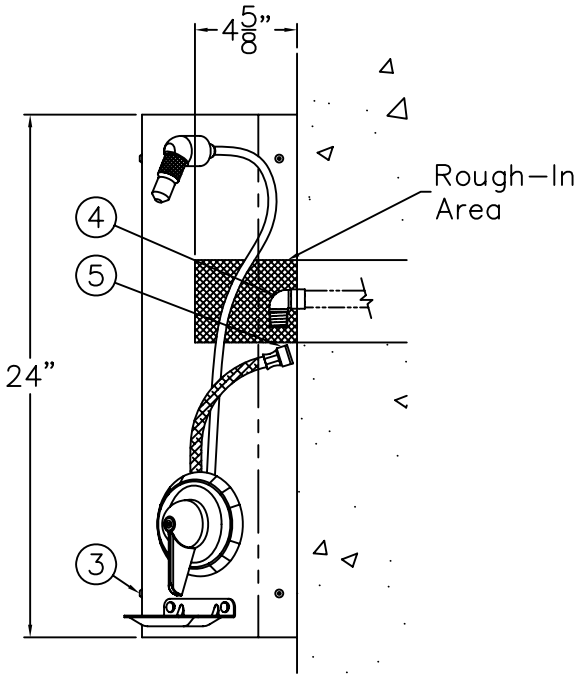

VIEW A-A

INSTALLATION INSTRUCTIONS:

A–DISASSEMBLE SHOWER PANEL ASSEMBLY ① FROM WALL MOUNTING FRAME ② BY REMOVING VANDAL–RESISTANT SCREWS ③ FROM THE FACEPLATE.

B–INSTALL MOUNTING FRAME ② AT DESIRED HEIGHT AND ANCHOR FRAME TO BOTH WALLS USING HARDWARE BY OTHERS.

C–PROVIDE SUPPLY ROUGH–IN(S) ④ IN THE AREA INDICATED. THOROUGHLY FLUSH SUPPLY LINES.

D–MAKE–UP SUPPLY CONNECTIONS TO 1/2" NPS FLEX HOSE FEMALE ENDS ⑤ WHILE SUPPORTING PANEL OFF THE FLOOR. (NOTE: SUPPLY INLET CONNECTION WILL ACCOMMODATE 1/2" NPT MALE ADAPTER.)

*__NOTE:__ INSTALLER MUST PROVIDE CHECKSTOPS WITH SAFTI–THERM VALVES IF OPTIONAL –GX CHECKSTOPS NOT ORDERED FROM ACORN.

E–ASSEMBLE THE SHOWER PANEL ① TO MOUNTING FRAME ② USING SCREWS ③ PROVIDED.

NOTE:
MAXIMUM RECOMMENDED WORKING PRESSURE IS 100PSI; TEMPERATURE IS 130°F; OUTLET TEMPERATURE IS RECOMMENDED AT A MAXIMUM OF 105°F.

WARNING:
PRIOR TO MAKING INSTALLATION, SUPPLY LINES MUST BE FLUSHED OF ALL FOREIGN MATERIAL SUCH AS PIPE DOPE, CHIPS, SOLDER, ETC. VALVE MUST BE DRAINED PRIOR TO BEING SUBJECTED TO FREEZING TEMPERATURES.

ACORN ENGINEERING COMPANY
P.O. BOX 3527 INDUSTRY, CA. 91744
(626) 336–4561 FAX (626) 961–2200

TITLE		
APEX FLUSH MOUNTED SHOWER (420 SERIES)		
MANUFACTURE DATE	DATE ISSUED	DRAWING NUMBER
APRIL 2003 TO PRESENT	**04/03/03**	**9900-010-002**
	DATE REVISED	

IMPORTANT!

WALL ANCHORS AND ANCHORING HARDWARE ARE BY OTHERS.

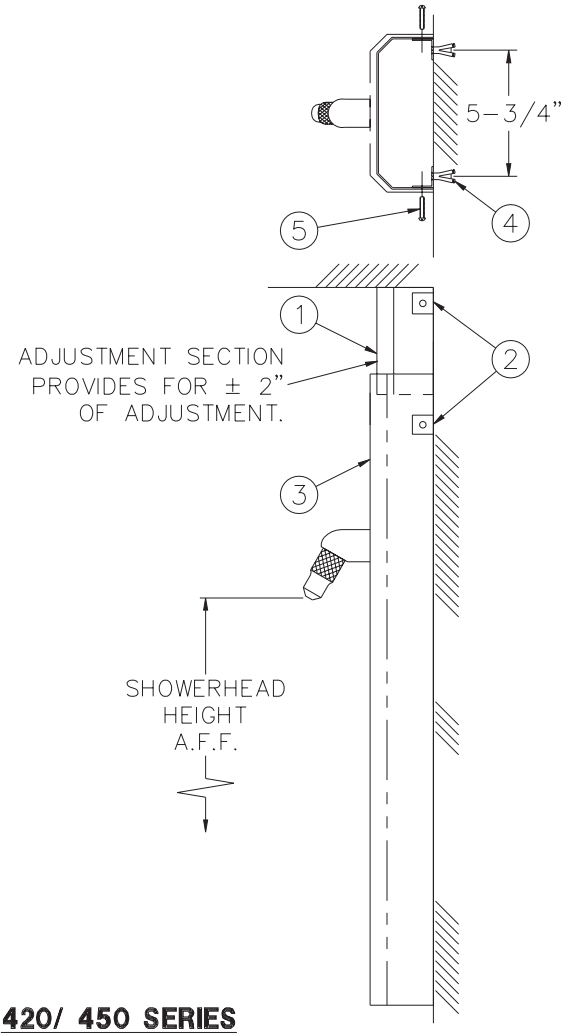

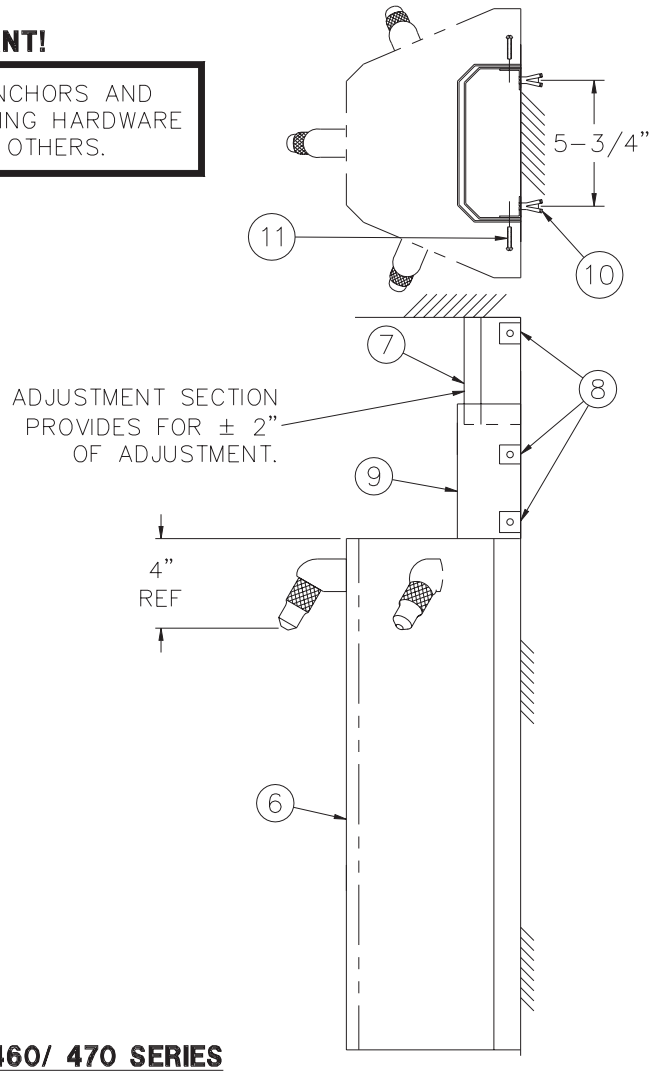

420/ 450 SERIES

INSTALLATION INSTRUCTIONS (420/450 SERIES)

AFTER COMPLETION OF TOP SUPPLY ROUGH-INS:

A- POSITION ADJUSTMENT SECTION (1) UP TO CEILING. USING ADJUSTMENT SECTION AS A TEMPLATE, MARK POSITION FOR L-CLIPS (2).

B- FOLLOWING THE APPROPRIATE FIXTURE INSTALLATION INSTRUCTIONS, USE EXTENDED HOUSING (3) AS A TEMPLATE TO MARK POSITIONS FOR L-CLIPS (2).

C- INSTALL WALL ANCHORS (4) (BY OTHERS) FOR L-CLIPS. POSITION L-CLIPS (2) WITH CAGE NUT FACING OUTWARD FOR ATTACHMENT OF HOUSING AND FASTEN TO WALL (WALL FASTENERS BY OTHERS).

D- ASSEMBLE ADJUSTMENT SECTION (1) TO L-CLIPS USING #10-32 SCREWS (5) PROVIDED.

E- COMPLETE FIXTURE INSTALLATION WITH HOUSING (2) OVER ADJUSTMENT SECTION (1).

NOTE: FOR 420 SERIES SHOWERS (NOT SHOWN), CEILING ADJUSTMENT SECTION ASSEMBLES OVER HOUSING.

460/ 470 SERIES

INSTALLATION INSTRUCTIONS (460/470 SERIES)

AFTER COMPLETION OF TOP SUPPLY ROUGH-INS:

A- MOUNT HOUSING (6) TO WALL PER APPROPRIATE FIXTURE INSTALLATION INSTRUCTIONS.

B- POSITION ADJUSTMENT SECTION (7) UP TO CEILING. USING ADJUSTMENT SECTION AS A TEMPLATE, MARK POSITION FOR L-CLIPS (8).

C- POSITION SUPPLY COVER (9) AND USE AS A TEMPLATE TO MARK POSITION FOR L-CLIPS (8).

D- INSTALL WALL ANCHORS (10) (BY OTHERS) FOR L-CLIPS. POSITION L-CLIPS (8) WITH CAGE NUT FACING OUTWARD FOR ATTATCHMENT OF HOUSING AND FASTEN TO WALL (WALL FASTENERS BY OTHERS).

E- ASSEMBLE ADJUSTMENT SECTION (7) TO L-CLIPS USING #10-32 SCREWS (11) PROVIDED.

F- ASSEMBLE SUPPLY COVER (9) TO L-CLIPS USING #10-32 SCREWS (11) PROVIDED.

ACORN ENGINEERING COMPANY
P.O. BOX 3527 INDUSTRY, CA. 91744
(626) 336-4561 FAX (626) 961-2200

TITLE		
APEX OPTION -SC SUPPLY COVER for MODEL #420, #450, #460 & #470		
MANUFACTURE DATE	DATE ISSUED	DRAWING NUMBER
JULY 1969 TO PRESENT	**10/05/92**	**9900-056-001**
	DATE REVISED **06/22/04**	