Shower-Ware® 410BBF Series

Apex Type 1, Flush-Mounted Showers - ADA Compliant

418BBF-W

Fixture May Show Some Available Options

- **Patented D697,591**
- **Ⓓ Acorn Engineering Co.**

Please visit ***www.acorneng.com*** for most current specifications.

Apex Type 1, Flush-Mounted Showers - ADA Compliant

Shower includes an ADA compliant control valve with a Patented Ligature Resistant ADA Compliant Tri-Lever Handle (Standard with T/P valve only), lever handle or pushbutton, fixed showerhead, a quick disconnect hand shower with on/off pushbutton, vacuum breaker and flow control, a diverter valve with a Patented ADA Compliant Tri-Lever Handle (Standard with T/P valve only) or lever handle , recessed soap dish, a two-wall stainless steel grab bar and a 1103 series padded vinyl folding seat. Unit conforms with ANSI, UFAS and ADA requirements for accessibility. Compliance is subject to the interpretation and requirements of the local code authority.

Shower Panel is 18 gage, type 304 stainless steel with satin finish.

Reach. All controls must be 38" to 48" from the finished floor to be within reach of a seated bather with limited arm movement.

Showerhead. A showerhead on a five foot stainless steel hose (hand shower) is provided for seated bathers. A conventional fixed showerhead is also provided at 6'-0" discharge height. Showerhead is solid brass, triple chrome-plated and includes a built-in 1.6 GPM flow restrictor. The Acorn Logan Wizard Showerhead design provides self-cleaning with every use, and has an adjustable spray pattern from a coarse stream to a fine mist.

Valves. Disabled bathers should be provided with protection against sudden hot or cold "shock". The Thermostatic/Pressure balancing mixing valve is ASSE 1016 compliant, and delivers constant water flow by compensating for temperature and pressure fluctuations. Mixing T/P valves are often required and strongly recommended. Indicate valve by selection of appropriate Shower-Ware® figure numbers.

Seat and Privacy Compartments. Disabled bathers understandably should be given privacy while bathing. In addition, transfer type stalls include the requirement to provide a seat opposite the controls. This suggests constructing an alcove, partial wall or providing a reinforced privacy panel for mounting the seat (suffix option -RP).

GUIDE SPECIFICATION

Provide and install an Acorn Apex Flush-Mounted, ADA Compliant Wall Shower (specify model number and options). Shower panel shall be fabricated from 18 gage, type 304 stainless steel and shall have a satin finish. Exposed trim shall be chrome-plated brass. Fixture shall be furnished with an ADA compliant control valve with a Patented Ligature Resistant ADA Compliant Tri-Lever Handle, lever handle or pushbutton, fixed showerhead, a quick disconnect hand shower with on/off pushbutton, vacuum breaker and flow control, a diverter valve with a Patented ADA Compliant Tri-Lever Handle or lever handle , recessed soap dish, a two-wall stainless steel grab bar and a padded vinyl folding seat. Units to conform with ANSI, UFAS and ADA requirements for accessibility.

Acorn Engineering Co. • 15125 Proctor Ave. • P.O. Box 3527 • City of Industry, CA 91744-0527 U.S.A.
Tel: (800)488-8999 • (626) 336-4561 • www.acorneng.com • E-mail: info@acorneng.com

Shower-Ware®: 410BBF Apex Type 1, Flush-Mounted Showers - ADA Compliant

MODEL NUMBER AND OPTIONS SELECTION

SERIES
- ☑ 4 Apex

TYPE
- ☑ -1 Flush-Mounted ADA Showers

VALVE SELECTION (Must Specify)
- ❑ -0 Electronic Valves, Single Temp Metering (Must Specify Type Where Indicated Below)
- ❑ -6 Air-Control, Single Temperature Metering
- ❑ -8 T/P Temperature-Pressure Balancing Mixing Valve With Patented Ligature Resistant ADA Tri-Lever Handle (ASSE 1016 Compliant)

VALVE ORIENTATION (Must Specify)
- ❑ -L Left ❑ -R Right

ELECTRONIC VALVE SELECTION

Master-Trol® (Electronic)
- ❑ -EVS1 Single Temp
- ❑ -EVSP1 Single Temp, Piezo Button

Master-Trol® PLUS (Electronic)
- ❑ -MTP1 Single Temp
- ❑ -MTPP1 Single Temp, Piezo Button

Time-Trol® (Electronic)
- ❑ -MVC1 Single Temp

Programmable (Electronic) w/9VDC Plug-In Transformer
- ❑ -PPZ1 Single Temp Programmable Piezo Button

SUPPLY (Must Specify)
- ❑ -W Wall ✓

VALVE OPTIONS
- ❑ -CI Cycle Interrupt for Time-Trol Valves
- ❑ -LVR Lever Handle (-8 & Diverter Valve)
- ❑ -PBH Hemispherical Pushbutton
- ❑ -TF Transformer, 120VAC to 24VAC (-MVC option only)

SHOWERHEAD OPTIONS
- ❑ -CSH Conical Showerhead (Ligature Resistant)
- ❑ -F Flow Control
  - ❑ 2.0 GPM (Not Available For Use in California)
- ❑ -HL Hi-Lo FX Bracket
- ❑ -MSH Multi-Stream Showerhead
- ❑ -P Penal Showerhead
- ❑ -PSO Positive Shut-Off For Quick-Disconnect
- ❑ -WS Without Showerhead
- ❑ -Y Universal Ball Joint
- ❑ -YY Lockable Universal Ball Joint

PRODUCT OPTIONS
- ❑ -BS Built-in Liquid Soap System
- ❑ -CH Curtain with Headrail - 36" Opening
- ❑ -D Soap Dish
- ❑ -EG Enviro-Glaze, Specify Color:_____
- ❑ -FG 14 Gage Panel
- ❑ -FSP Phenolic Folding Seat in Lieu of Padded Seat
- ❑ -FSS Stainless Steel Folding Seat in Lieu of Padded Seat
- ❑ -LFS Less Padded Folding Seat
- ❑ -LGB Less Grab Bar
- ❑ -LRD Less Recessed Soap Dish
- ❑ -MS Modular Privacy Compartments (See Diana Privacy Tab)
- ❑ -RP Reinforced Panel for Folding Seat with Curtain

Please visit ***www.acorneng.com*** for most current specifications.

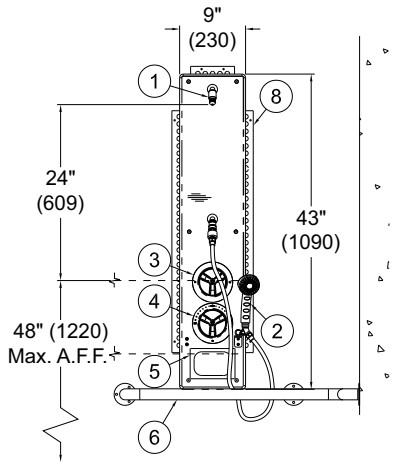

MODEL# 418BBF

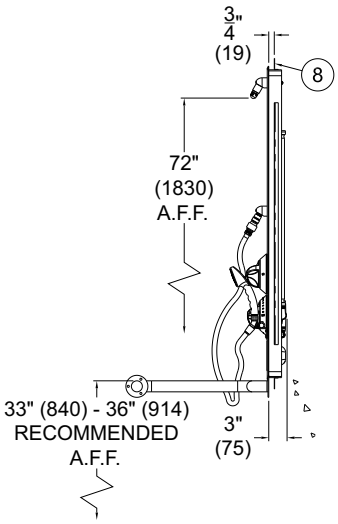

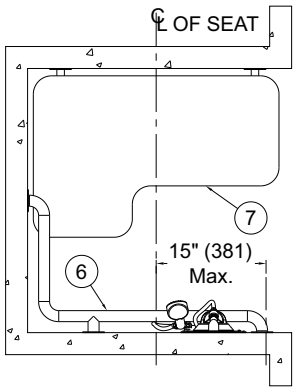

PADDED SEAT, LEFT HAND ORIENTATION SHOWN. FOR LEFT HAND VALVE

NOTES:
1. Conventional Showerhead
2. Handshower with 60" Hose
3. Diverter Valve w/ Standard Patented Tri-Lever Handle
4. T/P Valve w/ Standard Patented Tri-Lever Handle
5. Recessed Soap Dish
6. Two-Wall Grab Bar Provided
7. Padded Seat Provided
8. Wall Mounting Frame With Plaster Flange

⚠ WARNING: Cancer and Reproductive Harm - www.P65Warnings.ca.gov

Important: Installation instructions and current rough-in are furnished with each fixture. Do not rough in without certified dimensions.

Dimensions are subject to manufacturer's tolerance of plus or minus 1/4" and change without notice. Acorn assumes no responsibility for use of void or superseded data. © Copyright 2007 Acorn Engineering Company

Selection Summary	Approved for Manufacturing
Model No. & Option_____	Company_____ Title_____
Quantity_____	Signature_____ Date_____

Acorn Engineering Co. • 15125 Proctor Ave. • P.O. Box 3527 • City of Industry, CA 91744-0527 U.S.A.
Tel: (800)488-8999 • (626) 336-4561 • www.acorneng.com • E-mail: info@acorneng.com